REV	DESCRIPTION	DATE	APPR
A	K5050-1 WAS K5006-1	1/12/18	JPG

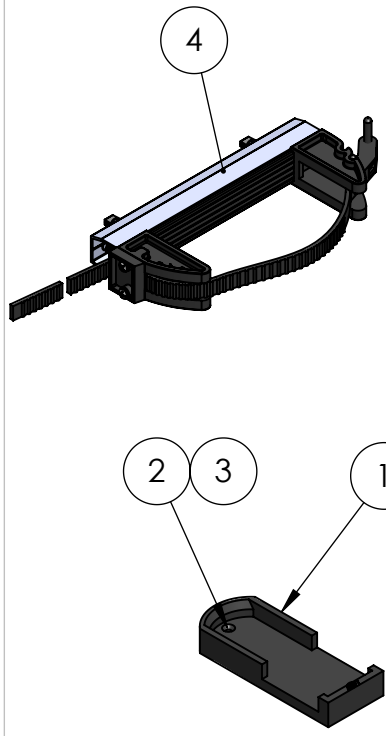

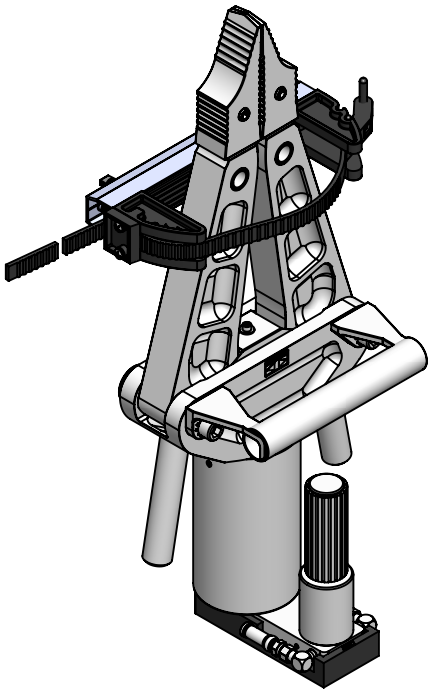

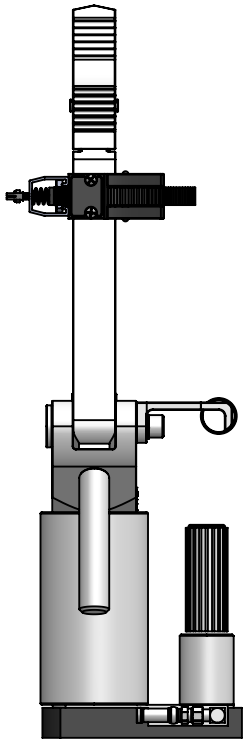

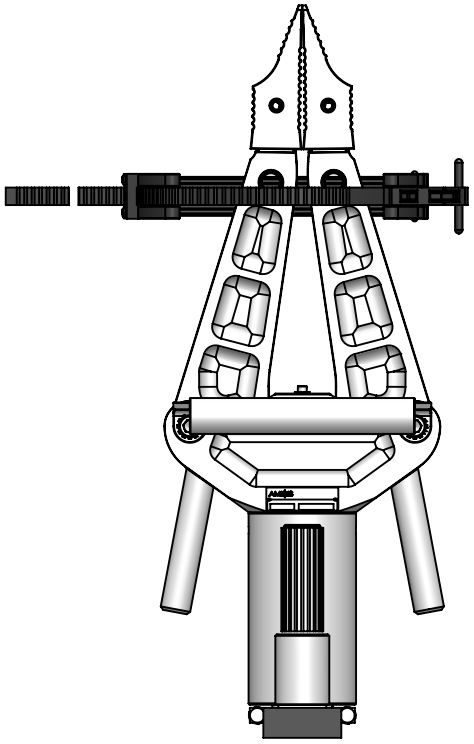

ITEM NO.	PAC P/N	PART NAME	QTY
4	K5050-1	SUPER ADJUSTAMOUNT KIT H.D.	1
3	7026	FASTENER KIT - AMKUS CUTTER	1
2	2033	FASTENER KIT	1
1	4097P	AMKUS BASE	1

NOTES:

ALSO AVAIL:

YELLOW STRAP **P/N K5024-Y**
ORANGE STRAP **P/N K5024-OR**

PERFORMANCE ADVANTAGE COMPANY

TOLERANCES UNLESS OTHERWISE SPECIFIED
.X=±.03
.XX=±.010
.XXX=±.005
.XXXX=±0.0005
ANGLES ±0.5 °
FRACTIONAL ±1/64

THIRD ANGLE PROJECTION

	NAME	DATE
DRAWN BY		
APPR. BY		
MFG BY		
MFG. P/N		
ENG APPR.		
MATERIAL		
ALT. MATERIAL		
FINISH		
COLOR		

THE INFORMATION CONTAINED IN THIS DRAWING IS THE SOLE PROPERTY OF **PERFORMANCE ADVANTAGE CO.** ANY REPRODUCTION IN PART OR AS A WHOLE WITHOUT THE WRITTEN PERMISSION OF PERFORMANCE ADVANTAGE CO. IS PROHIBITED.

TITLE:

AMKUS MOUNT KIT
SPREADERS

PART NUMBER K5024

REV A

SCALE: 1:8

SHEET 1 OF 1