PERFORMANCE ADVANTAGE COMPANY

2016 UTILITY CATALOG

PACTOOLMOUNTS.com

Fire, Rescue & EMS - Law Enforcement - Military - Utility - Towing & Racing - Landscaping

Hi, my name is Tom Trzepacz and I am the Utility Sales and Support Specialist for Performance Advantage Company. I am also very involved in the Fire Industry Division of our business! I have been a Firefighter / Fire Chief for almost 20 years. Just like the Fire Service, the Utility Industry has a lot of specialized tools and equipment that need to be organized and readily available. We at Performance Advantage Company strive to make the BEST tool mounting solutions for the industries that we serve. For over 20 years PAC has provided tool mounting solutions for the following industries: Fire, Law Enforcement, Military, Towing, EMS, Racing, Utility, and Industrial.

You can visit our product showroom / classroom in Lancaster NY or we can provide a free video conference on the internet to meet with you from your location while still being able to show you what we have to offer!

We are in the office from 8:00am – 5:00pm Eastern Standard Time Monday through Friday, feel free to call us at 1-888-514-0083 or you can reach me on my cell phone at 1-716-864-6834 and email – tom@pactoolmounts.com .

Thanks again, we look forward to serving you!

Tom Trzepacz
Utility Industry Sales Specialist

TOOL MOUNTING SOLUTIONS FOR WORLDWIDE INDUSTRIES

Company Overview

Performance Advantage Company (PAC), established in 1992, is a privately owned company which manufactures and markets high quality tool mounting brackets. PAC's primary market is the Fire Industry providing specialty tool mounting solutions for fire apparatus. Other markets include the Military, Law Enforcement, EMS, Utilities and Homeland Security.

Performance Advantage Company is located in Lancaster, New York, a suburb of Buffalo and sells its products direct or through a worldwide network of dealers.

Products

The products PAC offers are designed to mount life-saving tools safely and securely. Versatile and flexible mounting options provide the most efficient and accessible solutions for tools and equipment. Whether new or in-service vehicles, PAC products can be customized for individual needs and requirements.

PAC utilizes the best possible materials and manufacturing methods which result in long lasting service. PAC products are tested to the highest standards and are compliant with **National Fire Protection Association (NFPA) 1901** standards and **MIL-S901D** military shock specifications.

If any PAC product fails under normal use it is replaced, free of charge.

Service

Performance Advantage Company is proud to provide the best possible customer service. PAC maintains a large inventory to ensure that most orders are fulfilled quickly. Knowledgeable sales, engineering and technical support, installation and training representatives are available to assist customers with their needs.

Contact

Performance Advantage Company
10 Central Avenue
Lancaster, NY 14086
Toll Free: 1-888-514-0083
Fax Toll Free: 1-877-741-9206

Email: info@pactoolmounts.com
Web: www.pactoolmounts.com

Fire, Rescue & EMS - Law Enforcement - Military - Utility - Towing & Racing - Landscaping

PROTECT YOUR EQUIPMENT

The World Leader in Tool & Equipment Mounting for more than 20 years, the PAC team has designed brackets to secure and organize the tools for emergency services in over 35 countries.

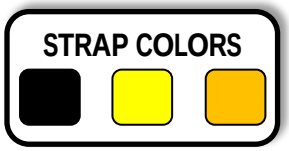

CATALOG INDEX

Positive and Friction Locking Brackets		
Handlelok	P/N 1004	p. 6
Toolok	P/N 1003	p. 6
Hooklok	P/N 1001	p. 6
Jumbo Lok	P/N 1070	p. 6
Flexmount (Tall version)	P/N 1002	p. 7
Flexmount (Short version)	P/N 1002-2	p. 7
Hangers, Hooks and Stabilizing Brackets		
Universal Hanger	P/N 1019	p. 7
GM Hook	P/N 1028	p. 7
Hookmount	P/N 1029	p. 8
Loop Hook	P/N 1027	p. 8
Universal Mount	P/N 1007	p. 8
Coil Lok	P/N 1021	p. 8
Rescue Tool Specific Brackets		
Rescue Saw Mount Kit - NEW	P/N K5030	p. 12
Bracket Kits		
Stow-N-Lok Kits	P/N K5005	p. 9
Stow-N-Lok Short Version Kits	P/N K5005s	p. 9
Bolt Cutter Kit	P/N K5029-1	p. 9
Tool Hanger Kits	P/N K5009	p. 9
Fastlok Adjustamount Kit *NEW	P/N K5020	p. 10
Fastlok Adjustamount Kit Long	P/N K5020L	p. 10
Adjustamount Kit	P/N K5006	p. 11
Extended Adjustamount Kit	P/N K5008	p. 11
Super Adjustamount Kit	P/N K5050	p. 11
Extended Super Adjustamount Kit	P/N K5060	p. 11
Sledge (8#) Hanger Kit	P/N K5010	p. 12
Chainsaw Kit	P/N K5060CS	p. 12
Sledge (10-12#) Hanger Kit	P/N K5010-12	p. 12

Aluminum Pac Trac Products & Accessories		
Dual Trac	P/N 7020	p. 17
Z-mount for Dual Trac	P/N 7001D	p. 17
Mini Dual Trac	P/N 7050	p. 18
Z-mount for Mini Dual Trac	P/N 7001-MD-1	p. 18
Pac Trac Right Angle Connector	P/N 3018	p. 20
Dual Trac Shelf Mount	P/N 3021	p. 20
Traclok packs	ASSORTED	p. 21
Channel Nuts (Dual Trac)	ASSORTED	p. 21
Additional Mounting Products & Accessories		
UNISTRUT – P4000 Series	P/N 2019	p. 19
UNISTRUT – P1000 Series	P/N 2020	**p. 19**
UNISTRUT Channel Cushion	**P/N 1006-3**	**p. 19**
Channel Nuts (Unistrut)	**ASSORTED**	**p. 19**

Our line extends beyond the items in this catalog. For example, PAC offers mounting options for nearly all makes and models of Heavy Rescue Equipment! For your specific needs with Hurst, Holmatro etc. please CONTACT PAC TODAY!

PAC WARRANTY

IF ANY PART FAILS UNDER NORMAL SERVICE IT WILL BE REPLACED – NO CHARGE – PERIOD.

EXCEPT FOR THE PAC WARRANTY, WE DISCLAIM LIABILITY FOR INCIDENTAL AND CONSEQUENTIAL DAMAGES FOR BREACH OF ANY EXPRESS OR IMPLIED WARRANTY. WE DISCLAIM ANY WARRANTIES OF MERCHANTABILITY OR FITNESS FOR A PARTICULAR PURPOSE.

Fire, Rescue & EMS - Law Enforcement - Military - Utility - Towing & Racing - Landscaping

P/N 1004
HANDLELOK

GRIP RANGE:
1/8” to 1-3/4” (3.2mm-44.5mm)

P/N 1003
TOOLOK

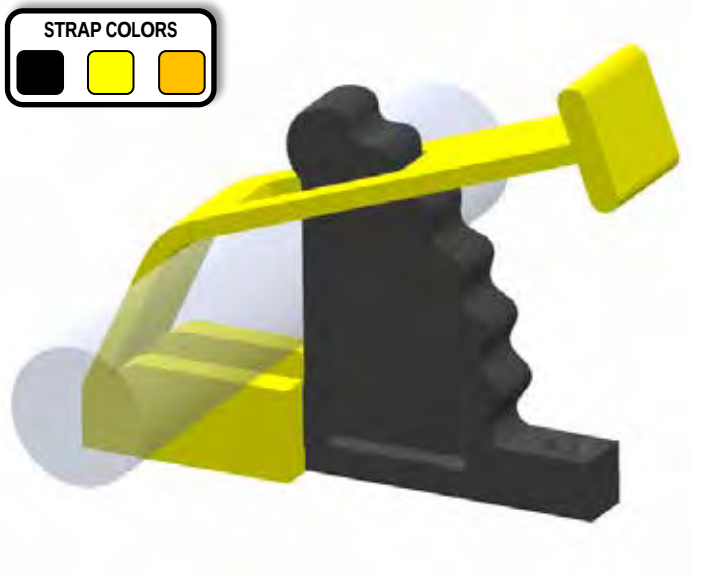

GRIP RANGE:
1/8” to 1-1/2” (3.2mm-38.1mm)

PACTOOLMOUNTS.com

P/N 1001
HOOKLOK

GRIP RANGE:
1” to 1-1/4” (25.4mm-31.8mm)

P/N 1070
JUMBO LOK

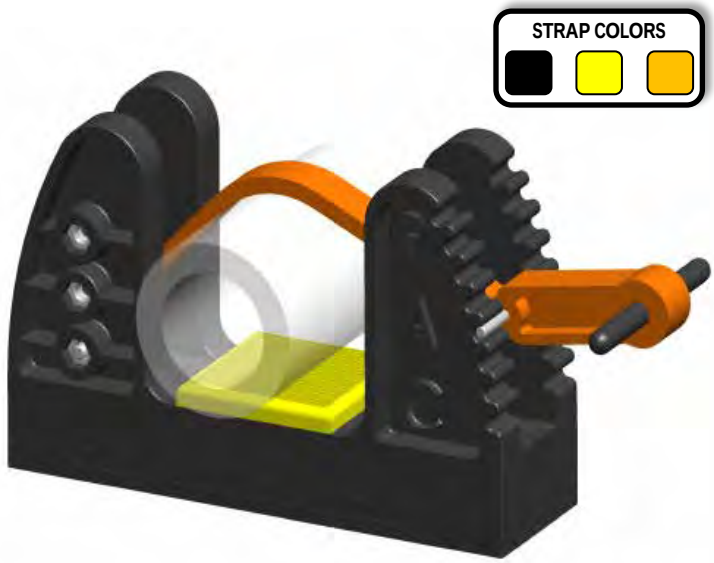

GRIP RANGE:
3/8” to 3-1/4” (9.5mm-82.6mm)

P/N 1002
FLEXMOUNT TALL

GRIP RANGE:
1-3/4”” to 2-1/2”
(44.5mm-63.5mm)

P/N 1002-2
FLEXMOUNT SHORT

GRIP RANGE:
1-3/4”” to 2-1/2” (44.5mm-63.5mm)

PACTOOLMOUNTS.com

P/N 1019
UNIVERSAL HANGER

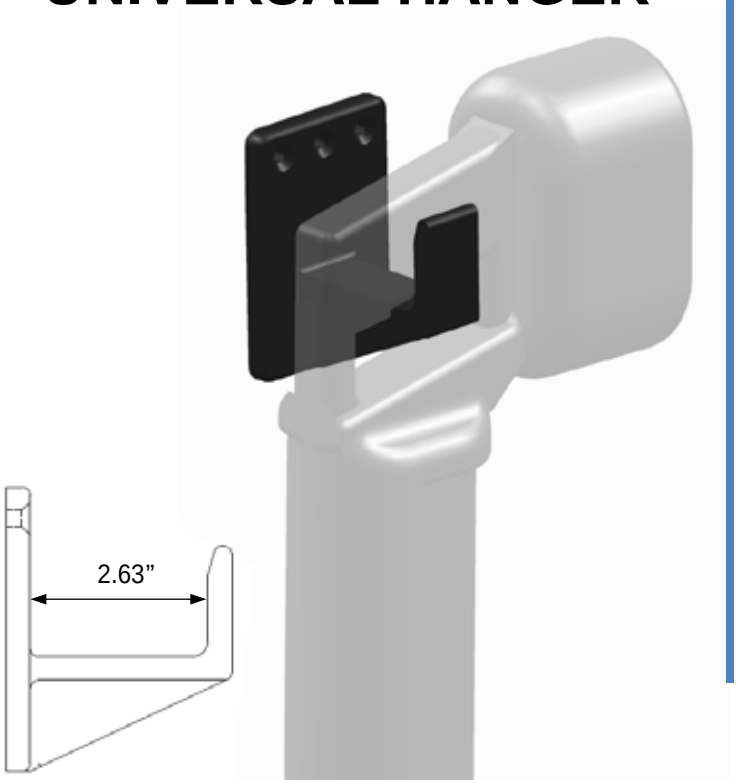

P/N 1028
GM HOOK

P/N 1029
HOOKMOUNT

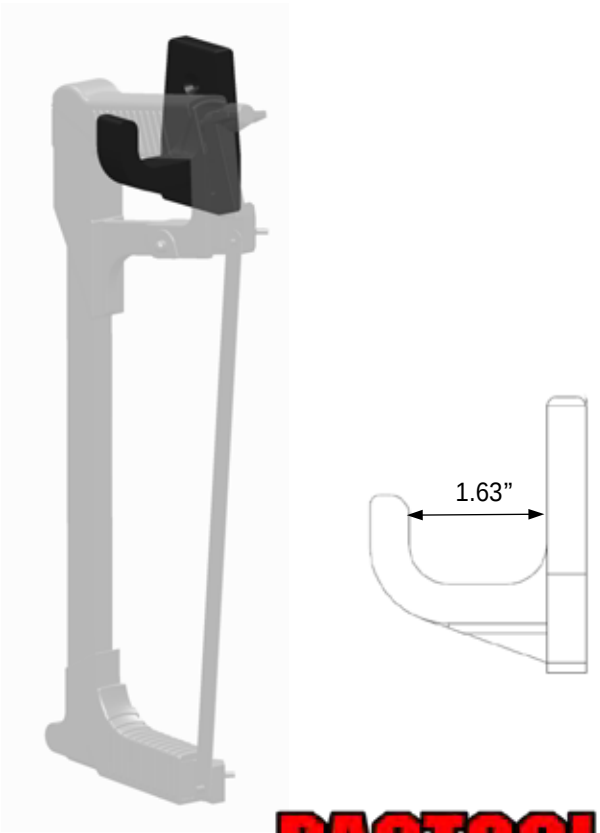

P/N 1027
LOOPHOOK

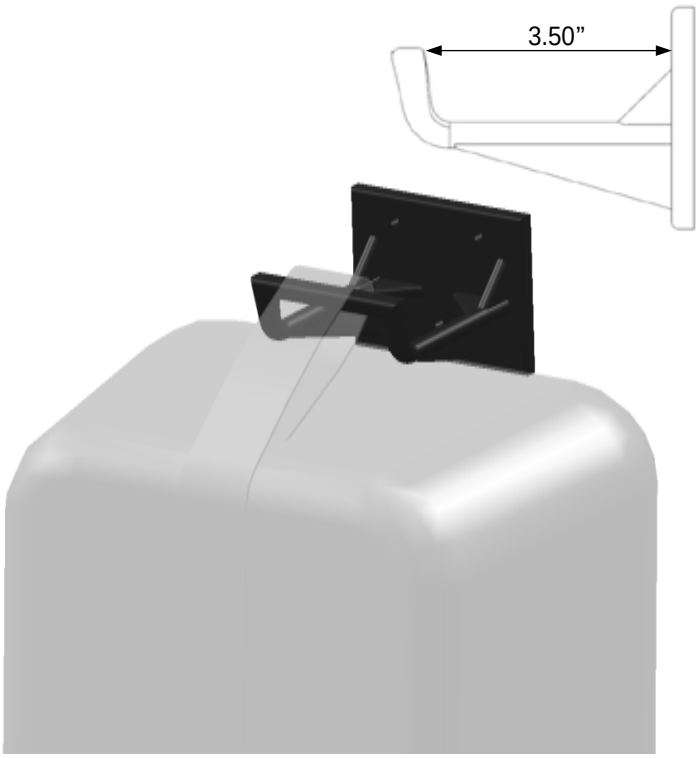

PACTOOLMOUNTS.com

P/N 1007
UNIVERSAL MOUNT

P/N 1021
COILOK

P/N K5029-1
BOLT CUTTER KIT

P/N K5005
STOW-N-LOK KIT TALL

STRAP COLORS

GRIP RANGE:
1” to 1-1/2”
(25.4mm-38.1mm)

PACTOOLMOUNTS.com

P/N K5005S
STOW N LOK KIT SHORT

STRAP COLORS

GRIP RANGE:
1” to 1-1/2” (25.4mm-38.1mm)

P/N K5009
TOOL HANGER KIT

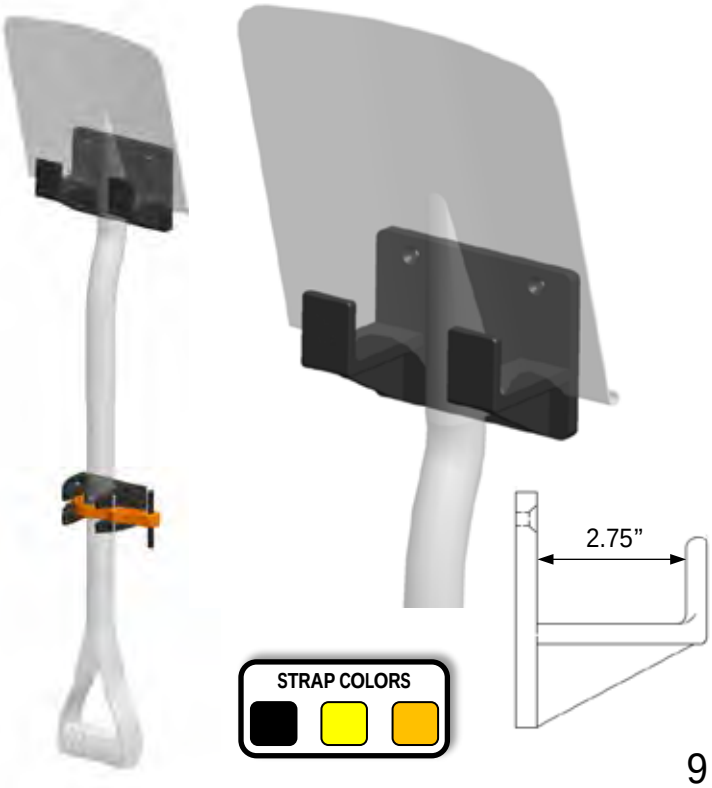

STRAP COLORS

P/N K5020L
FASTLOK LONG STRAP KIT

PACTOOLMOUNTS.com

P/N K5020
FASTLOK KIT

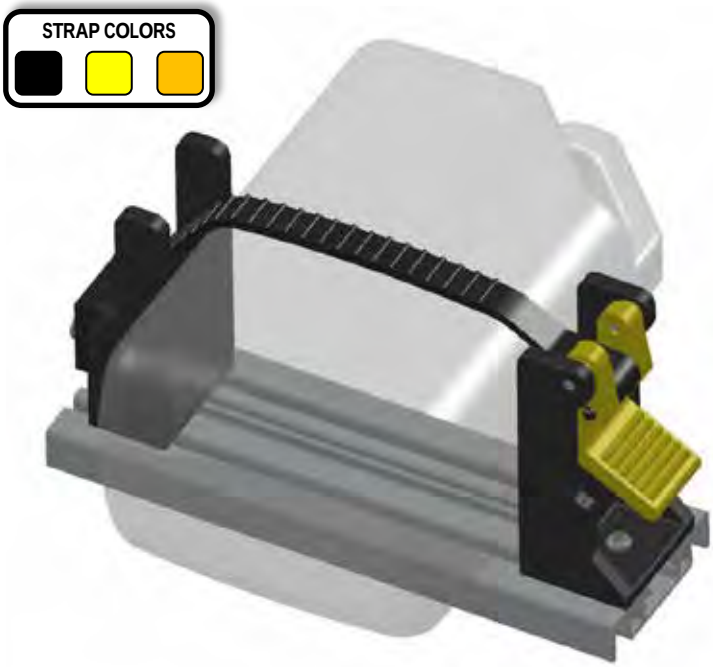

K5020 SHOWN

P/N K5008 EXTENDEND ADJUSTAMOUNT KIT

STRAP COLORS

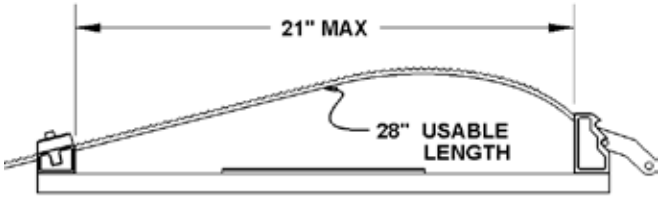

P/N K5050 SUPER ADJUSTAMOUNT KIT

STRAP COLORS

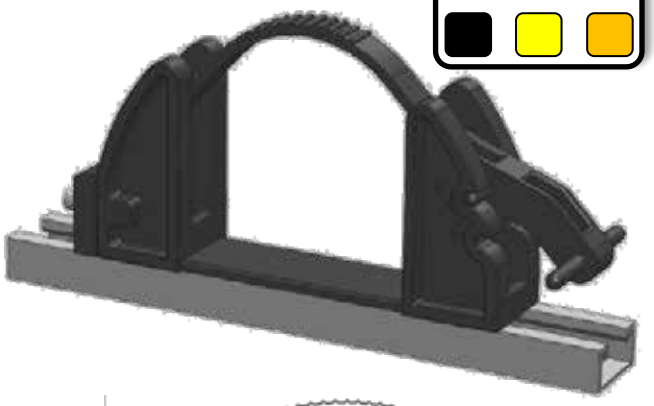

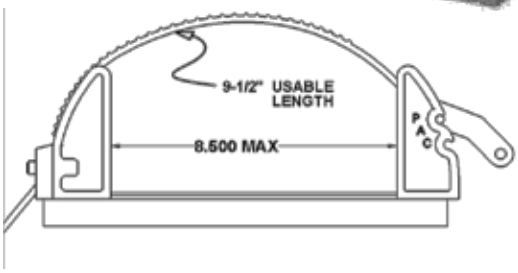

PACTOOLMOUNTS.com

P/N K5060 EXTENDED SUPER ADJUSTAMOUNT KIT

STRAP COLORS

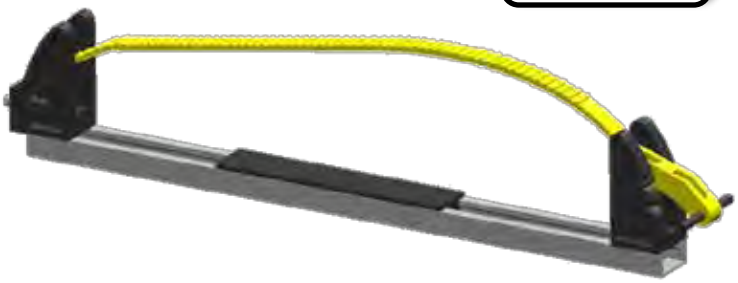

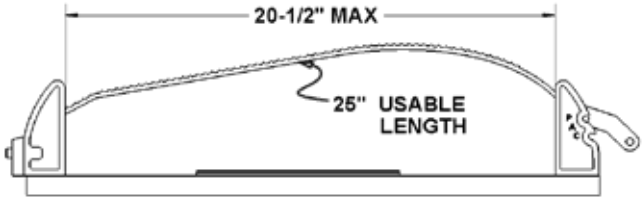

P/N K5006 ADJUSTAMOOUNT KIT

STRAP COLORS

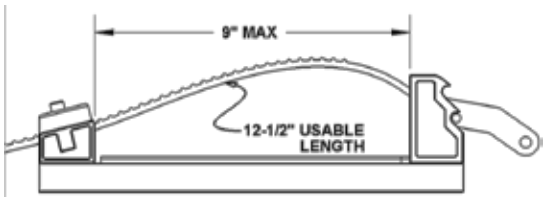

P/N K5010-12
(10-12#)
SLEDGE HANGER KIT

MOUNT YOUR TOOLS
HEAD UP
OR
HEAD DOWN
WITH
PAC BRACKET KITS!

STRAP COLORS

Note: Pocket features inside dimensions of 7.55” x 2.75”

P/N TBD
CHAIN SAW KIT

NEW

COMING SOON!

STRAP COLORS

PACTOOLMOUNTS.com

NEW & IMPROVED

P/N K5030
RESCUE SAW
MOUNT KIT

STRAP COLORS

NEW AND IMPROVED DESIGN!

P/N K5010
(8#) SLEDGE HANGER KIT

MOUNT YOUR TOOLS
HEAD UP
OR
HEAD DOWN
WITH
PAC BRACKET KITS!

STRAP COLORS

Note: Pocket features inside dimensions of 7.0” x 2.5”

P/N K5035FL
HEAVY RESCUE MOUNT KIT FASTLOK VERSION

STRAP COLORS

P/N K5035JL
HEAVY RESCUE MOUNT KIT JUMBO LOK VERSION

STRAP COLORS

PACTOOLMOUNTS.com

P/N K5032
HALLIGAN TOOL MOUNT

STRAP COLORS

P/N K5003HD
IRONSLOK HD

STRAP COLORS

NEW & IMPROVED

PACTOOLMOUNTS.com

P/N K5020 FASTLOK

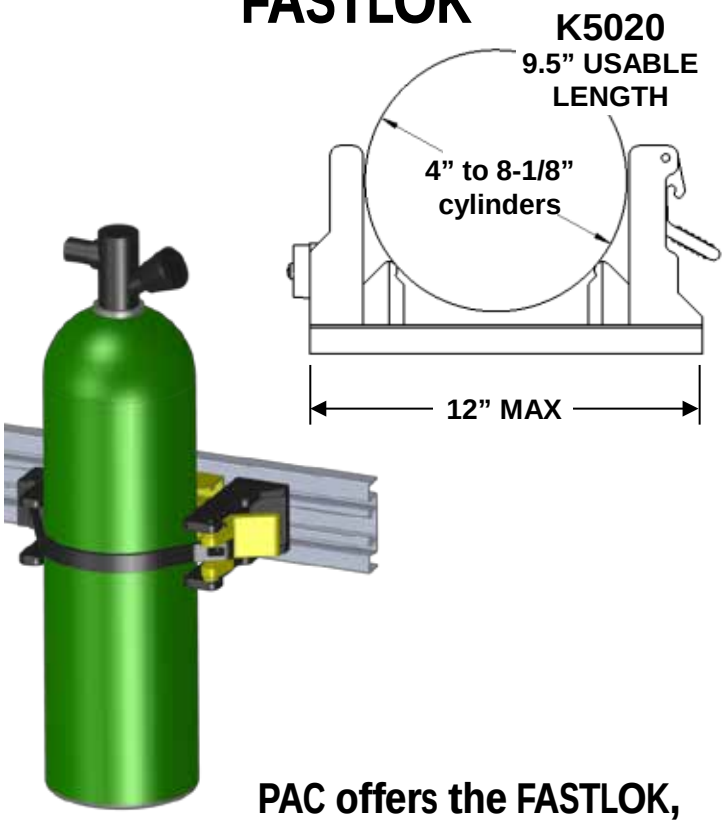

P/N K5020L FASTLOK LONG

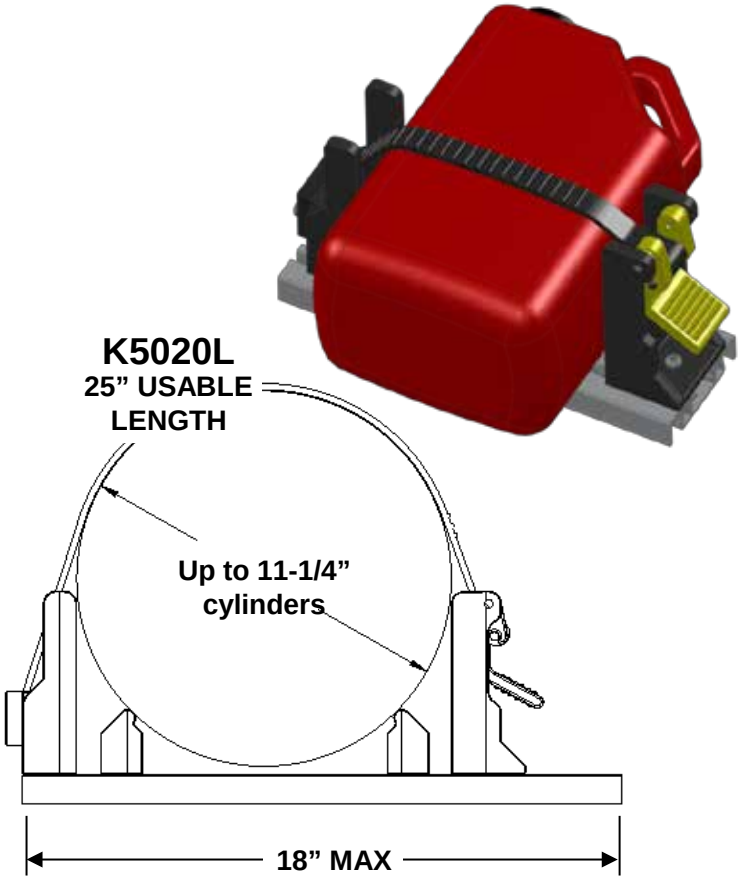

PAC offers the FASTLOK, one of the newest items in our line! Securing larger & heavier items is now even easier!

- Easily and quickly secure equipment - even with gloves on.
- Easily Re-adjustable
- No metal to metal contact
- Track base provides fast setup and adjustment
- Mounts the following:
  - Fire extinguishers
  - Air cylinders
  - Hydraulic pumps
  - Rescue tools
  - Chain saws
  - Oxygen cylinders
  - And many more!

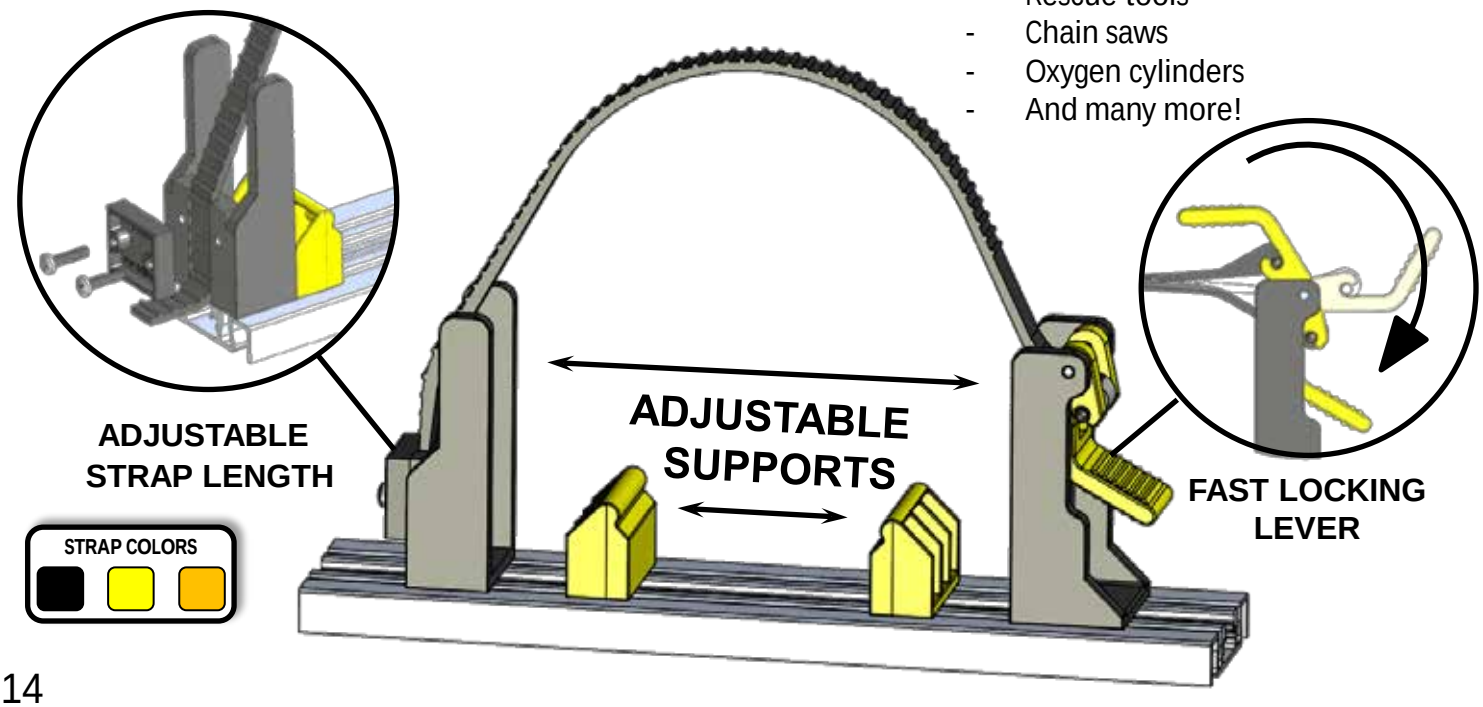

PRODUCT INSTALLATIONS

PAC TRAC ALUMINUM PRODUCT OVERVIEW

The PAC TRAC Family of products are designed to provide a unique and versatile mounting surface for tools and equipment. PAC TRAC boards have special grooves or channels which allow the assembly of tool boards and the mounting of brackets and equipment.

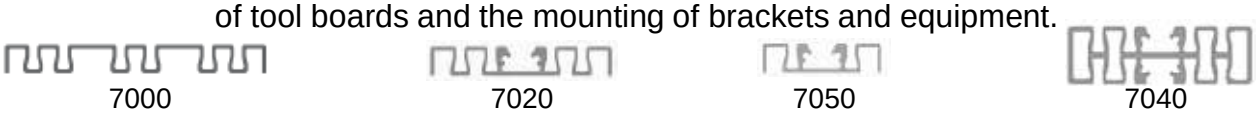

7000 7020 7050 7040

Our mounting system outperforms all others on the market. The Pac Trac family of extrusion is NFPA 1901 Impact G Force & MIL Grade B certified as a mounting structure for testing tool brackets.

PAC TRAC boards are extruded from 6063-T5 aluminum. Available in standard lengths of 50”, 70” and 120”. Boards are available in width increments of 3-3/4” (7050), 5-3/4” (7020 + 7040) and 8-5/8” (7000).

ASSEMBLY METHODS

Assemble tool boards with Z-Mount (P/N 7001 and 7001D)

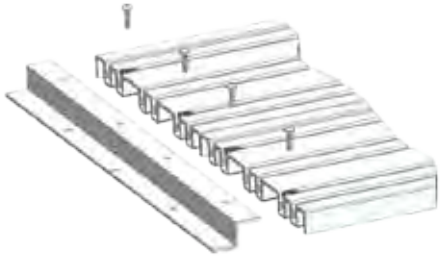

Z & U Channel kits come in pairs AND include hardware. Choose your board type and the number of sections. There is a corresponding frame kit to make your custom toolboard assembly simple!

Assemble double sided tool boards with U-Channel (P/N 7009)

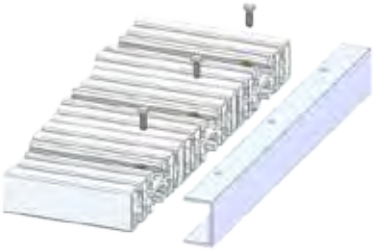

ATTACHMENT METHODS

SCREW MOUNTING WITH Z-MOUNT

TOOLBOARD ASSEMBLIES

BRACKET MOUNTING METHODS

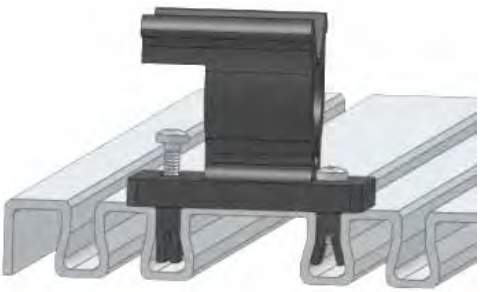

Trac Lok Inserts (included with brackets)

PAC brackets can be installed without drilling holes. Brackets can be easily relocated, removed or reoriented! Brackets are attached to PAC TRAC products with PAC Trac Lok inserts or optional PAC channel nuts[1]. For heavy duty applications use optional Steel Uni-Strut channel nuts 2023[1].

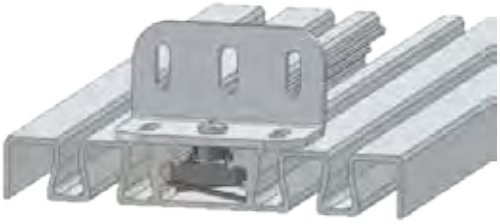

Channel Nuts (Optional P/N 3023 & P/N 3024, not included)

[1] Only Mini(7050), Dual(7020) & Double Dual Trac (7040) have channels

P/N 7020
PAC DOUBLE DUAL TRAC

STD. SIZES	50”,70”, 120”
CUSTOM SIZES	up to 120”
Width	5-3/4” (146mm)
Height	7/8” (22.2mm)
WT./FT	1.8 lbs.
Assy. Method	Z-Mount
Bracket Fasteners	Trac Lok Channel Nuts

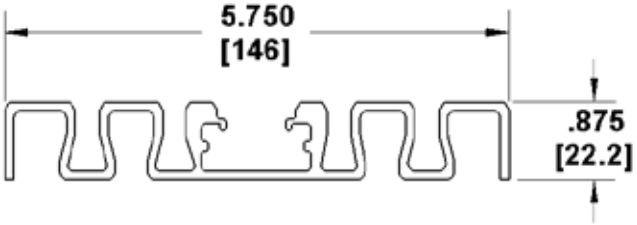

Similar to the original **PAC TRAC** but adds a Uni-Strut® style center channel for PAC Channel Nuts.

PACTOOLMOUNTS.com

P/N 7001D
Z-MOUNT KITS FOR DUAL TRAC

Z-Mount for Dual Trac is designed for the assembly and mounting of tool board panels made with **Dual Trac** (P/N 7020). Z-Mount for Dual Trac uses PAC **Channel Nuts** (P/N 3024) and screws for assembly of board sections. Mounting hardware to compartment walls not included.

- 7001D sold individually & includes hardware bag 7011
- 7001D-(1-10) **Sold in pairs** & includes hardware bag 7006 (qty 1-10)

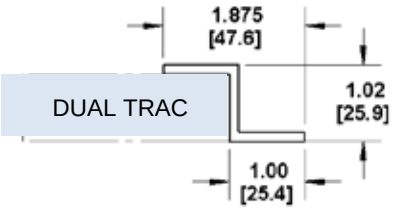

P/N	No. Boards	Length	Qty
7001D	N/A	120“	1
7001D-1	1	5.75"	2
7001D-2	2	11.50"	2
7001D-3	3	17.25"	2
7001D-4	4	23.00"	2
7001D-5	5	28.75"	2
7001D-6	6	34.50"	2
7001D-7	7	40.25"	2
7001D-8	8	46.00"	2
7001D-9	9	51.75"	2
7001D-10	10	57.50"	2
INCLUDES ALL ASSEMBLY HARDWARE			

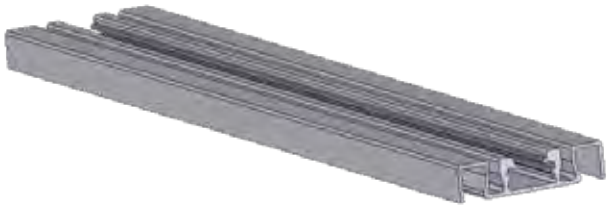

P/N 7050
PAC MINI DUAL TRAC

STD. SIZES	50”,70”, 120”
CUSTOM SIZES	up to 120”
Width	3-3/4” (95.2mm)
Height	7/8” (22.2mm)
WT./FT	1.1 lbs.
Assy. Method	P/N 7001-MD-1
Bracket Fasteners	Trac Lok Channel Nut

Narrow version of **DUAL TRAC** for use as a single mounting board, an addition to other Pac Trac panels or as a construction member for assemblies.

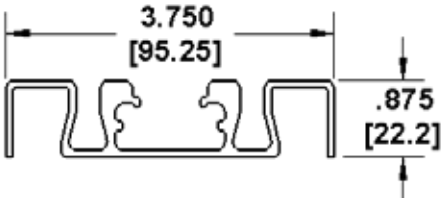

PACTOOLMOUNTS.com

P/N 7001-MD-1
Z-MOUNT KIT FOR MINI DUAL

P/N	No. Boards	Length	Qty
7001-MD-1	1	3.75“	2
INCLUDES ALL ASSEMBLY HARDWARE			

Sold in pairs; includes hardware bag 7006

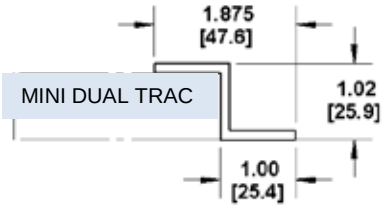

Z-Mount for Mini Dual Trac is designed for the mounting of a single board of **Mini Dual Trac** (P/N 7050).
Z-Mount for Mini Dual Trac uses PAC **Channel Nuts** (P/N 3024) and screws for assembly of board sections.

P/N 2019
UNISTRUT (shallow)

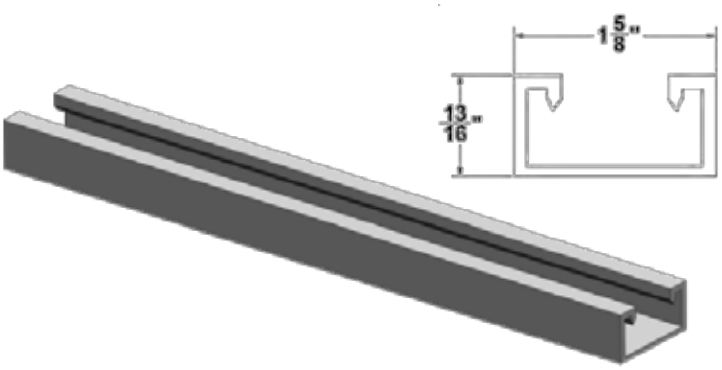

- Use with steel channel nuts **2010**
- Available by the inch up to 120” max

MATERIAL	ALUMINUM
THICKNESS	.078”
PRODUCT WT. DIMENSIONS	.45 lbs/ft 1-5/8” W X 13/16” H

P/N 2020
UNISTRUT (Deep)

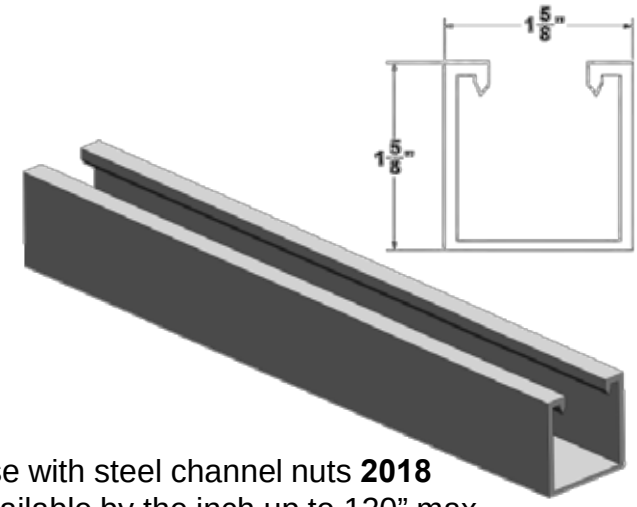

- Use with steel channel nuts **2018**
- Available by the inch up to 120” max

MATERIAL	ALUMINUM
THICKNESS	.109”
PRODUCT WT. DIMENSIONS	.76 lbs/ft 1-5/8” W X 1-5/8” H

PACTOOLMOUNTS.com

P/N 1006-3
UNISTRUT CHANNEL CUSHION

Provides insulation and a firm bottom grip between the mounted object and Unistrut. Works with PAC Unistrut 2019 & 2020

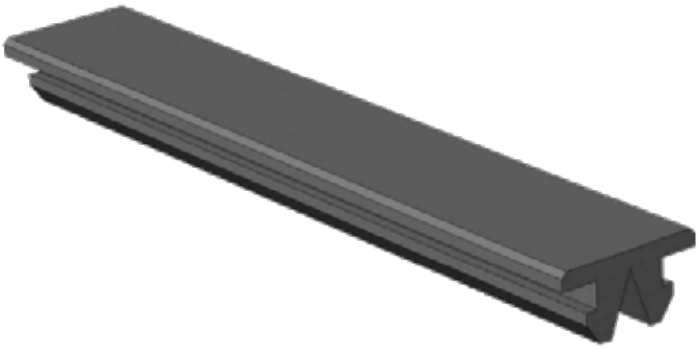

NOTE: COMES PRE-CUT AT 8.25”.
CUSTOM LENGTHS ARE AVAILABLE.

ASSORTED CHANNEL NUTS FOR UNISTRUT

P/N 2010

SCREW SIZE	1/4-20
MATERIAL	GALVANIZED STL.
MOUNTS TO	UNISTRUT 2019

P/N 2018

SCREW SIZE	1/4-20
MATERIAL	GALVANIZED STL.
MOUNTS TO	UNISTRUT 2020

P/N 3018
CORNER ADAPTER

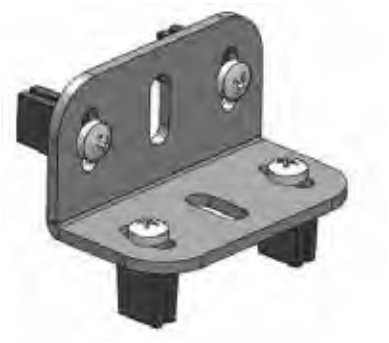

Material	5052 aluminum
Size	1-1/2” x 2-3/4”
Assembly Fasteners	Trac Lok Channel Nut (optional)
Includes Assembly Hardware NOTE: OPTIONAL CHANNEL NUTS #2023 NOT INCLUDED	

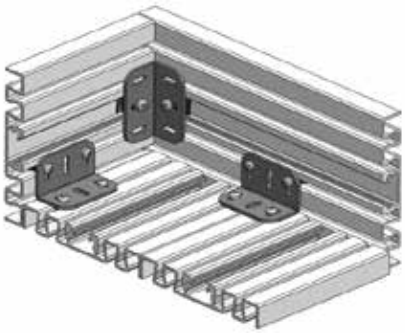

PACTOOLMOUNTS.com

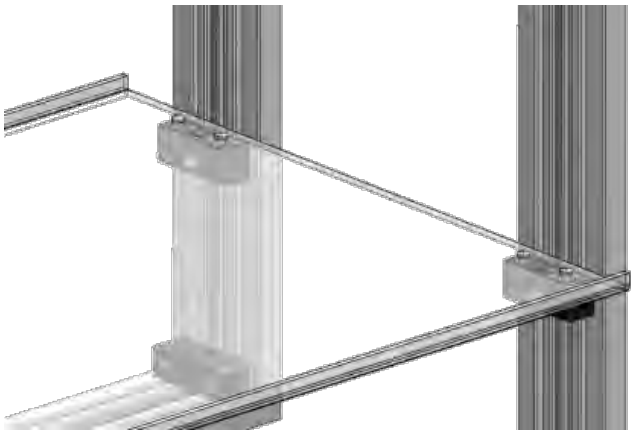

P/N 3021
DUAL TRAC SHELF MOUNT

Material	Nylon
Size	1”x 1-1/8”x3”
Assembly Fasteners	Trac Lok Channel Nut
Includes Assembly Hardware	

Fasteners for Pac Trac products provide a fast reusable method of assembly and mounting.

Patented Trac Lok Inserts expand and contour into grooves in all Pac Trac boards. NOT FOR USE WITH Tube Trac (P/N 7060).

Channel nuts locate into the center channel of Dual, Mini and Double Face Pac Trac boards.

These CHANNEL NUTS hold brackets to our DUAL TRAC extrusions. These inserts lock in the tracks when the screw is tightened. Loosen the screws and the CHANNEL NUTS can be moved or removed.

- Durable, non-corrosive
- Installs easily
- Remove, reuse and reposition easily

INDIVIDUAL PART NUMBERS LISTED.

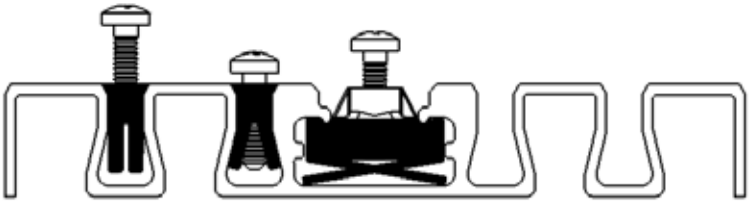

P/N	7016	3023	3024	2023
Name	TRAC LOK INSERT	CHANNEL NUT	CHANNEL NUT	CHANNEL NUT
SCREW SIZE	#10-24	10-24	1/4-20	1/4-20
MATERIAL	PAC NYLON	PAC NYLON	PAC NYLON	GALVANIZED STEEL [1]
MOUNTS TO	PAC TRAC DUAL TRAC MINI DUAL DOUBLE DUAL	DUAL TRAC UNISTRUT 3020	DUAL TRAC UNISTRUT 3020	DUAL TRAC UNISTRUT 3020
Torque (in-lbs)	15	25	50	
Load Rating (lbs.)	150	435	435	
				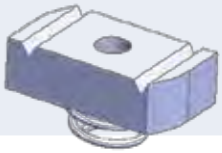

1) Also available in Stainless Steel – order PAC P/N 3014

VISIT US OR MAIL US AT:

PERFORMANCE ADVANTAGE CO.
10 CENTRAL AVE.
LANCASTER, NY 14086

PAC is located 10 minutes from the City of Buffalo in Lancaster, NY. Call and make an appointment for a company tour. See how our huge “Classroom”, displaying many real-world tool mounting examples, will inspire your department.

Our building houses the Greater Lancaster Fire Fighting Museum. We are dedicated to preserving the Fire History of Lancaster, NY. The newest exhibits feature two companies from Lancaster, NY; fire fighting innovators - Young Fire Equipment & Scott Aviation!
Jerry would be glad to give a tour! Email Jerry@pactoolmounts.com.
The museum also sponsors the hugely popular Lancaster Christmas Fire Truck parade.

PAC was founded on the experience of Dick Young, former President of Young Fire Equipment. His experience and innovation in the Fire Truck market is what makes PAC Tool Mounts superior. Our knowledgeable team has lifetimes of experience in the Industry. Our passion shows in our proven designs.

PERFORMANCE ADVANTAGE COMPANY

NEW!

Coil-Lok P/N #1021

- Extension Cords
- Hydraulic Hose
- Pike Poles
- Multiple "D" Handled Tools
- Chains
- Tow Lines
- Coiled Cables

For Pricing Or More Information Please Contact Us At:

Toll Free: 888-514-0083

www.pactoolmounts.com

Contact Performance Advantage Company For Your Tool Mounting Solutions:

PERFORMANCE ADVANTAGE COMPANY
10 CENTRAL AVENUE
LANCASTER, NY 14086

FOR DIRECT SALES & SERVICE BY A MEMBER OF OUR PROFESSIONAL STAFF CONTACT US THROUGH ONE OF THE CONTACT POINTS LISTED:

MIKE McGUIRE – LAW ENFORCEMENT/MILITARY/FIRE
SALES AND TECHINCAL SUPPORT
MIKE@PACTOOLMOUNTS.COM

TOM TRZEPACZ – FIRE/LAW ENFORCEMENT/UTILITY/IND./OTHER
TECHINCAL SUPPORT AND PRODUCT TRAINING
TOM@PACTOOLMOUNTS.COM

DEAN MAYHEW – FIRE
SOUTH & WESTERN U.S. CUSTOMER SUPPORT
DEAN@PACTOOLMOUNTS.COM

JARED ENSER – FIRE/INTERNATIONAL
DIRECT SALES
JARED@PACTOOLMOUNTS.COM

PHONE: (716) 683-7413 FAX: (716) 683-6578
PHONE TOLL FREE: 1-888-514-0083
FAX TOLL FREE: 1-877-741-9206
WEB: WWW.PACTOOLMOUNTS.COM
EMAIL: INFO@PACTOOLMOUNTS.COM